Rotary Shaft Seals

cee-tak
sealing solutions

What is the purpose of a Rotary Shaft Seal?

There is a wide selection of seals available for use in rotary applications; these range from traditional single or double lipped elastomeric configurations to PTFE based designs.

Rotary shaft seals are used throughout many industries in a variety of different application conditions. These conditions can vary from high-speed shaft rotation with light oil mist, to a low speed reciprocating shaft in muddy environments.

Rotary shaft seals can be required to seal lube oil in high-speed crankshaft applications or for gasoline and diesel engines that operate in conditions ranging from the tropics to the arctic; in submarines, oil tankers, windmills, steel mills, paper mills, refineries, automobiles and plant machinery.

In fact, rotary seals can be found in any equipment with a rotating shaft, and must be designed to be able to withstand the critical requirements of each individual application.

In rotating applications, the seal can also impact the service life of indirect components such as mechanical seals, couplings, pulleys or other in-line coupled equipment. If a seal allows the system lubricant to run below safe levels, or allows foreign materials to enter the bearing cavity, the bearing will soon begin to show signs of failure. As the bearing fails, vibration from excessive shaft runout will be transferred to all other in-line components and will shorten their service life as well.

Additionally, seals can also be used to separate two different fluids, to retain internal pressure or exclude an external pressure.

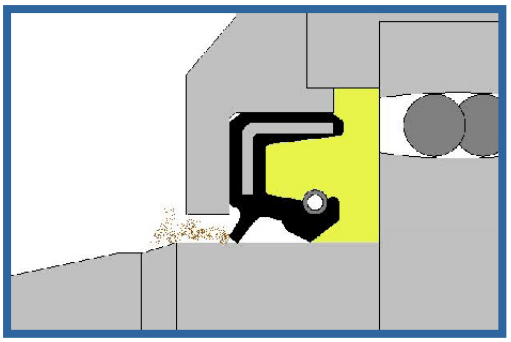

Rotary seal shown in application - dust lip to prevent contamination

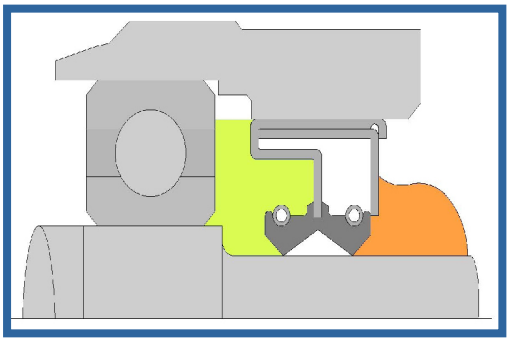

Opposed dual spring-loaded lips for separation of two fluids

How do Rotary Shaft Seals work?

Rotary shaft seals work by squeezing and maintaining the lubricant in a thin layer between the lip and the shaft. Sealing is aided by the hydrodynamic action caused by the rotating shaft which creates a slight pump action.

The amount of frictional heat that is generated in an application is dependant on a combination of many operating parameters: shaft surface, internal pressure, operating speed, lubricant type, lubricant levels, lip geometries and lip materials are just a few conditions that should be considered, and it is important to note that these conditions are interactive.

It is imperative to have an understanding of rotating shaft seals when selecting the correct solution for each application in order to reduce the mean time between failure of rotating equipment.

Rotary Shaft Seal Components

Typical rotary shaft seal components include a rigid outer component and a flexible, elastomeric inner lip - the seal lip can be springless or spring-loaded.

The outer rigid material can range from carbon steel, aluminium and stainless steel or can be a non-metallic composite. The purpose of the outer component is to position and retain the seal in the housing - it is also important to maintain a leak-free fit between the seal and the housing.

There are various sealing lip configurations based on the type of service, speed, pressure and dynamic run-out for which the seal is designed. The seal geometry may also include hydrodynamic pumping features which are normally moulded into the lip element on its air side (or machined when applied to PTFE seals). Common hydrodynamic patterns are triangular and helical, and function by pumping oil that has passed by the primary lip back under the lip to reduce leakage.

Rotary Shaft Seal Materials

There are three main components of rotary shaft seals to consider when specifying materials:

Lip materials

Where an elastomeric lip is specified, there are a wide variety of compounds available for manufacture depending on the application parameters; the table below shows common elastomer compounds, with characteristics and operating temperature ranges.

Material	Temperature range	Characteristics
Nitrile (NBR)	-40°C to +100°C	Most commonly used in rotary shaft sealing industries. Good resistance to oil, fuel and alkali solutions. Excellent resistance to petroleum based hydraulics and is resistant to hydrocarbon solvents. Good mechanical properties, abrasion resistance and tear strength. Poor resistance to ozone, ketones, automotive or aircraft brake fluids, and steam and hot water.
Carboxylated Nitrile (XNBR)	-40°C to +100°C	Used in applications where particles may collect at the point of shaft contact. Greatly enhanced abrasion resistance over standard NBR, whilst maintaining similiar chemical compatibility. Less resilient and flexible at low temperatures than standard NBR.
Hydrogenated Nitrile (HNBR)	-35°C to +150°C	Offers improved abrasion resistance, excellent chemical resistance and higher operating temperatures than standard NBR.
Fluorocarbon (FKM)	-40°C to +200°C	Excellent resistance to oils, fuels and hydraulic fluids at high temperatures. Good resistance to flame and excellent impermeability to gases and vapours. Limited cold flexibility.
Ethylene Propylene (EPDM)	-50°C to +150°C	Offers excellent heat, ozone and sunlight resistance. Good low temperature flexibility, good resistance to alkalis, acids and oxygenated solvents. Improved resistance in water and steam in applications where NBR and FKM exhibit poor service life. Not recommended for petroleum oil.
Polyacrylate (ACM)	-20°C to +150°C	Recommended for higher operating temperatures or applications where extreme pressure lubricants are used. Also offers additional resistance over standard NBR to ozone and weather attack. Poor abrasion resistance compared to NBR.
Silicone (VMQ)	-60°C to +200°C	Generally recommended for high temperature, low friction applications. Resistant to weather, ozone, water, bases and alcohols. Not recommended with steam, acids, aliphatic hydrocarbons, aromatic hydrocarbons, halogenated hydrocarbons, phosphate ester or polar solvents. Poor abrasion resistance.
Neoprene (CR)	-40°C to +100°C	Good resistance to weather, ozone and natural ageing, moderate resistance to oil and gasoline.Good abrasion, flex and cracking resistance.
Polytetrafluoroethylene (PTFE)	-250°C to + 260°C (depending on filler)	Recommended for use with virtually any fluid. Extremely low friction and very wide temperature range. Excellent mechanical properties achieved when blended with fillers such as carbon, glass, bronze, graphite and many others.

Spring materials

Springs are available in a wide range of materials; the table below shows a range of materials and suitable applications.

Wire Type	Maximum Service Temperature		Application
	°C	°F	
Carbon Steel	120	250	General Purpose
Monel 400	230	450	Saltwater
Inconel 750	675	1250	Extreme Temperature
Phosphor Bronze	95	200	Saltwater
302/304 Stainless Steel	260	500	Corrosion Resistance
316 Stainless Steel	315	600	High temperature corrosion resistance
Hastelloy®	315	600	Corrosion Resistance
Elgiloy®	260	500	Corrosion Resistance

Case materials

Metal - Cold rolled carbon steel is the most common and cost-effective metal case material. Stainless steel case materials are available at additional costs for use in corrosive applications and extreme conditions. Polymer coating is standard on most oil seals and optional on other metal case designs. Other case materials include aluminium, zinc-plated cold rolled steel and Hastelloy®.

Composite - A fibre reinforced composite shell will fit a wide range of bore tolerances and provide a rustproof gasket type seal at the OD. A composite case will also fit slight imperfections in the bore housing, reducing machining costs.

Case materials can also be partially or completely coated in rubber. Generally, carbon steel cases are used in rubber moulded options; a rubber covered OD offers improved bore sealing.

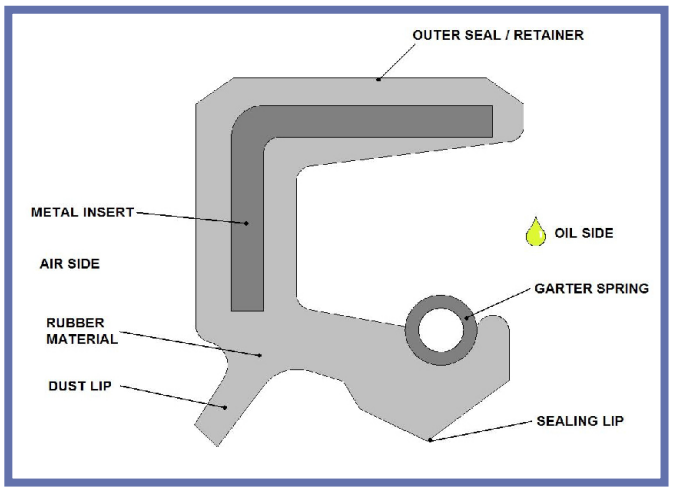

Ceetak also offer a range of PTFE based rotary shaft seals for applications that may not be suitable for metal or composite cased and elastomeric lip seals (for example extreme temperatures, aggressive chemical media or high pressures).

There are 3 main types of PTFE rotary seals; FlexiSeal and FlexiLip and FlexiCase:

FlexiSeals - Feature either a flanged design or an o-ring on the OD to keep the seal fixed in the bore as the shaft rotates.
The o-ring can either be centred along the OD or located in the heel of the seal.
The seals are manufactured in a wide range of PTFE composites and virtually any material o-ring can be supplied with a custom FlexiSeal (although FKM is standard).

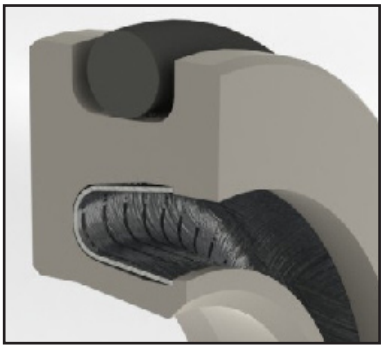

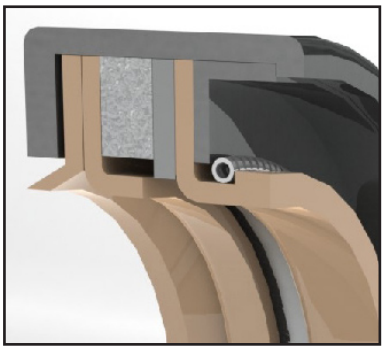

FlexiCase - Feature an ID lip that seals dynamically on a shaft, and metal casing on it's OD to seal statically when press-fit into a bore. A gasket is sandwiched between layers of sealing lips and the casing to seal off any potential leak paths.
The seals are manufactured in a wide range of PTFE composites, and machinable plastic materials with standard gasket choices including NBR, FKM and EPDM.
Metal casing choices include stainless steel, cold-rolled steel, zinc-plated steel and aluminium.

FlexiLip - Feature an ID lip that seals dynamically on a shaft, and an elastomeric o-ring on its OD to seal statically in a bore. Since the lip is not spring energised, the radial lip contact forces are lower than that of a FlexiSeal which allows the seal to function at much higher surface speeds.
The seals are manufactured from a wide variety of PTFE composites and machinable plastics, and standard o-ring choices include NBR, FKM, EPDM and silicone.

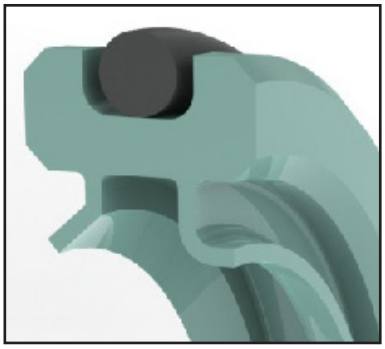

Rotary Seal Profiles

There is a huge range of seal profiles available for different rotary shaft sealing applications; shown below is a basic overview of the main types of profiles. For further profile information and seal recommendation please contact our Application Engineers for guidance.

Springless Profiles - General purpose, springless design - most commonly used for grease retention.
Materials: Rubber covered metal case, elastomer lip.

Spring Loaded Profiles - General purpose, spring loaded design - most commonly used for grease retention with an additional dust lip for applications potentially exposed to high levels of contamination.
Materials: Rubber covered metal case, elastomer lip.

Spring Loaded Profiles - General purpose, spring loaded design - most commonly used for grease retention.
Materials: Rubber covered metal case, elastomer lip.

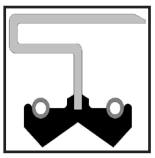

Dual Spring Loaded Profiles - Dual spring loaded lips are generally used where separation of two fluids is required and can also be used for high contamination applications.
Materials: Metal case, elastomer lip (rubber covered metal case available).

Medium Pressure Profiles - For medium pressure applications. Double lip profiles incorporate a secondary lip on heel for exclusion of light dust and fluids.
Materials: Rubber covered metal case, elastomer spring-loaded lip .

Cassette Seal Profiles - For heavy duty applications . Also referred to as “labyrinth” seals.
Feature multiple sealing points with fully incorporated design. Sealing elements ride on an internal sealing surface, minimising shaft surfacing requirements with no shaft grooving.

PTFE FlexiSeal Profiles - For demanding, low speed/high pressure applications.
Materials: Wide variety of PTFE composites, standard o-ring materials and spring materials available.

PTFE FlexiLip Seal Profiles - For demanding, high speed/low pressure applications.
Materials: Wide variety of PTFE composites/machinable plastic materials, and standard o-rings include fluorocarbon, silicone, nitrile and EPDM.

V-Ring Profiles - Axial (Face) seals, external protection. Suitable for high velocity, low friction applications.
Materials: Wide variety of elastomeric compounds available.

Shielded V-Seal - Increased external sealing capability, e.g. high pressure water hosing applications.
Materials: Metal casing with wide range of elastomeric lips available.

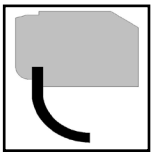

Special Profiles - For example “crimped” design, suitable for high pressure and high velocity applications.
Materials: Metal casing with PTFE lip

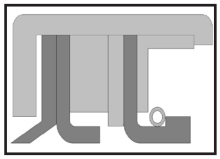

PTFE FlexiCase Seal Profiles - For demanding, high speed/low pressure applications.
Materials: Wide variety of PTFE composites/machinable plastic materials and standard gasket choices include fluorocarbon, silicone, nitrile and EPDM. Casing materials include stainless steel, cold-rolled steel, aluminium and zinc plated cold rolled steel

Maximum allowable peripheral speeds

The graph below shows the approximate maximum allowable peripheral speed for rotary shaft sealing elements manufactured from NBR (Nitrile), ACM (Polyacrylate), FKM (Fluorocarbon) and MVQ (Silicone) materials, with no differential pressure, and material operating temperatures not exceeded.

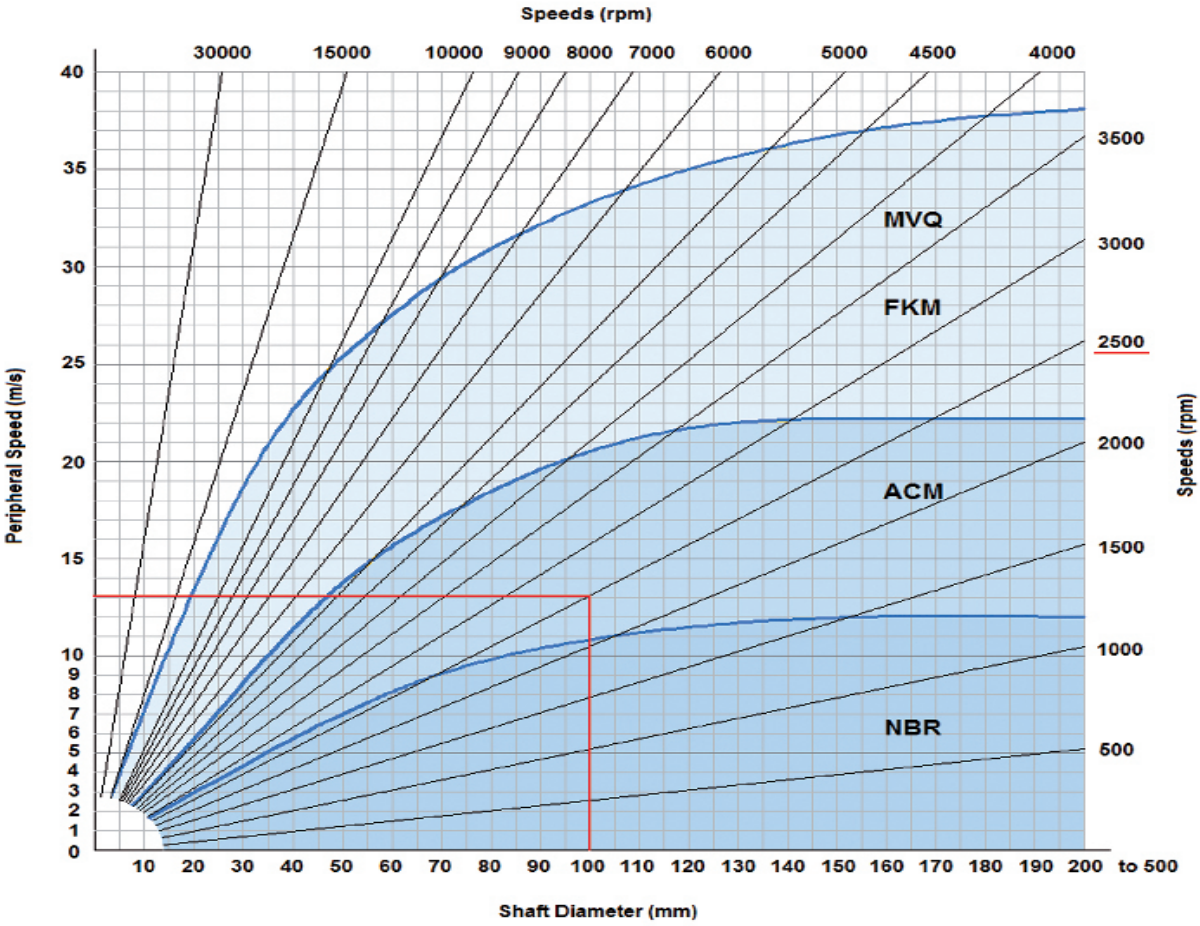

Example shown in red: 100 mm shaft diameter @ 2500 rpm = 13 m/s peripheral speed
Therefore ACM material would be suitable for this application.

Concentricity Tolerance

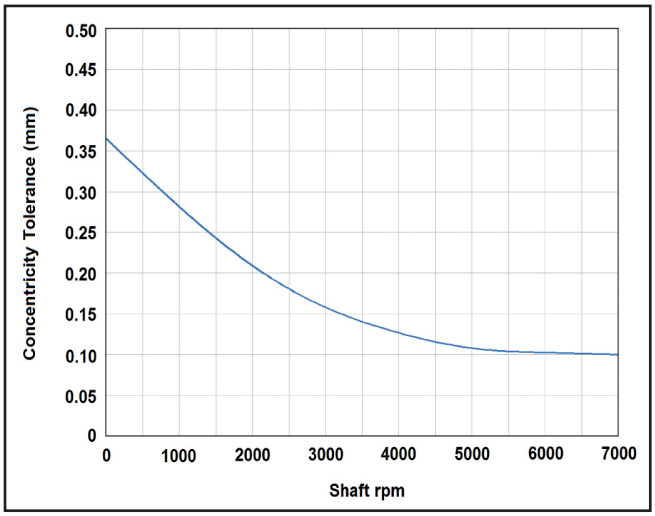

This graph shows the shaft concentricity tolerance based on the rpm of the shaft

It can be noted from the graph that the higher the rpm, the tighter the tolerance required.

Ceetak Ltd Head Office:
Fraser Road, Priory Business Park,
Bedford, MK44 3WH
Tel: 01234 832200
Fax: 01234 832299

Web: www.ceetak.com
Email: info@ceetak.com

Ceetak Aberdeen:
Block 1, Unit 13,
Souterhead Rd,
Altens Industrial Estate,
Aberdeen, AB12 3LF
Tel: 01224 249690
Fax: 01224 249691